SY385C

LARGE HYDRAULIC
EXCAVATOR

85,318 LBS OPERATING WEIGHT
314 HP GROSS HORSEPOWER
26' 4" MAX DIGGING DEPTH

SANY



CLEAR **WITH**
CONFIDENCE

EASY TO **OWN, OPERATE, & SERVICE**

INDUSTRY'S STRONGEST STANDARD WARRANTY

5-YEAR* 5,000 HOURS

*Warranty applies to 2026 Excavator and Wheel Loader models

MADE FOR AMERICAN OPERATORS

In north Georgia, a family-owned contractor clears forty acres for a new subdivision with their SANY excavator. Father, son, and crew work long days felling large timber, sorting usable wood, managing burn piles, loading trucks, and trenching utilities across rolling ground. From first push to final grading, they oversee every phase despite heat, dust, and tight schedules. The proven Cummins engine and smooth pilot hydraulics deliver steady control while pushing limits across demanding tasks. A 5-year, 5,000-hour warranty protects the investment every hour, while support from the local dealer and the SANY America team keeps the machine ready when it matters most.









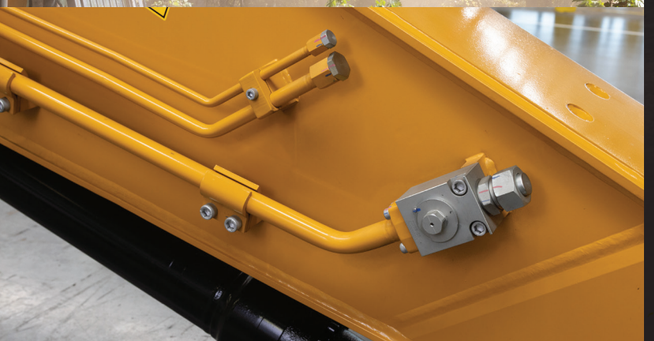

LC | **LONG** CHASSIS (LC)

The SY385C's standard long chassis extends the excavtor's track frame and adds extra rollers to increase ground contact, lower ground pressure, and improve stability when digging or lifting. Standard 800 mm triple-grouser wide tracks boost traction and stability, giving operators a more planted, predictable machine.

| **QUICK COUPLER** COMPATIBLE

The SY385C comes standard with factory quick-coupler plumbing and cab controls, with OEM couplers available through your local SANY dealer. This makes adding a coupler less expensive, easy, and fully integrated. Couplers improve jobsite efficiency, simplify transport, and increase versatility, giving you more capability from the same machine.

| **COMPONENTS** YOU TRUST

The SY385C is built with components by brands you know and trust. From Cummins to Kawasaki to Parker, you're getting a machine made with familiar, proven, reliable systems that offer ample support. It's an ecosystem of dependable components that make ownership easier.

| **EFFICIENT** BY DESIGN

The SY385C is engineered for efficiency, combining a fuel-efficient powertrain with responsive hydraulics to deliver quick cycle times and digging performance. Strong breakout forces and excellent lift capacities help complete tough tasks faster, reducing passes, saving fuel, and keeping production moving day.

| **AUXILLARY** HYDRAULICS

The SY385C Includes factory-installed auxiliary hydraulics: a high-flow primary circuit, a dedicated rotate circuit, and a case drain. The primary circuit supports one-way flow, two-way flow and continuous flow. All auxiliary pressure and flow settings are easily adjustable from the cab display.

190
GPM
on primary auxillary circuit

A MACHINE **THAT'S EASY TO OWN**

The SY385C is built for high-output production, giving contractors the versatility required for large underground utilities, bulk earthmoving, site preparation, land clearing, and truck loading. With high-flow auxiliary hydraulics and factory quick-coupler plumbing, the SY385C simplifies switching between buckets and specialized attachments, keeping changes fast and efficient while expanding capability without adding complexity. Using proven components from respected suppliers, it delivers dependable performance you can rely on day after day. A rugged, reinforced undercarriage and durable chassis provide strength, stability, and safety in demanding environments. The SY385C is engineered to work hard, adapt to the job, and keep ownership straightforward for the long term.

RELIABLE FROM THE INSIDE OUT

Working long days, protecting your crew, and maintaining steady cash flow all depend on reliable machinery. The SY385C is built for long-term durability, engineered to withstand thousands of operating hours in tough conditions. Its heavy-duty frame manages constant digging and lifting loads, while the hydraulic system delivers consistent force, pressure, and power. The powertrain is designed to run all day powering the pumps without interruption. Every component is aimed at cutting downtime and increasing productivity. It's backed by a 5-year / 5,000-hour factory warranty, protecting your timeline with proven dependability.



STRUCTURAL INTEGRITY

SANY machines don't cut corners on steel. We build each machine with the material it needs to deliver strength, stability and durability. Reinforced booms and sticks with internal ribbing add stiffness and rigidity, while the reinforced X-frame undercarriage is built to take a beating on the toughest terrain. In our state-of-the-art factories, robotic welding and CNC cutting ensure every part fits properly and is welded to last. Strict quality control then confirms the structural integrity meets our standards before it ever reaches your jobsite.

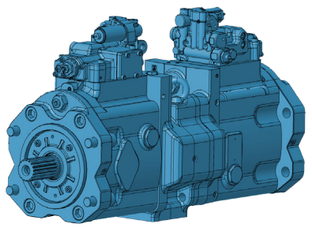

HYDRAULIC SYSTEM

The SY385C uses a pilot-controlled hydraulic system giving operators a smooth, predictable feel at the controls. Its load-sensing hydraulics deliver fast cycle speeds, strong breakout forces and excellent lifting performance. Auxiliary hydraulic pressure and flow are easily adjustable from the cab display with a case drain and dedicated rotate circuit included standard from the factory. And with Parker hydraulic components throughout, the system is built to handle the high stress and demanding work your projects require.

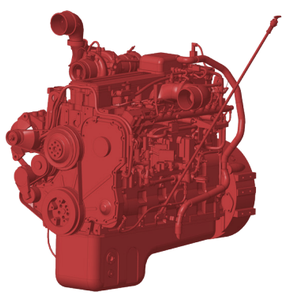

POWERTRAIN BY CUMMINS

Powered by a Cummins QSL9 diesel engine with auto idle meets or exceeds EPA emissions regulations, the SY385C provides the efficiency and compliance your business needs. With 314 gross hp at 2,100 rpm, it delivers the power and torque to run day and night on the demanding jobsites. It's a powertrain you already know and trust—backed by a major support network—where parts, service and expertise are within reach. That means more uptime, less worry and a machine that works as hard as you do.

314

HORSE POWER

Gross horse power @ 2,100 rpm by Cummins QSL9

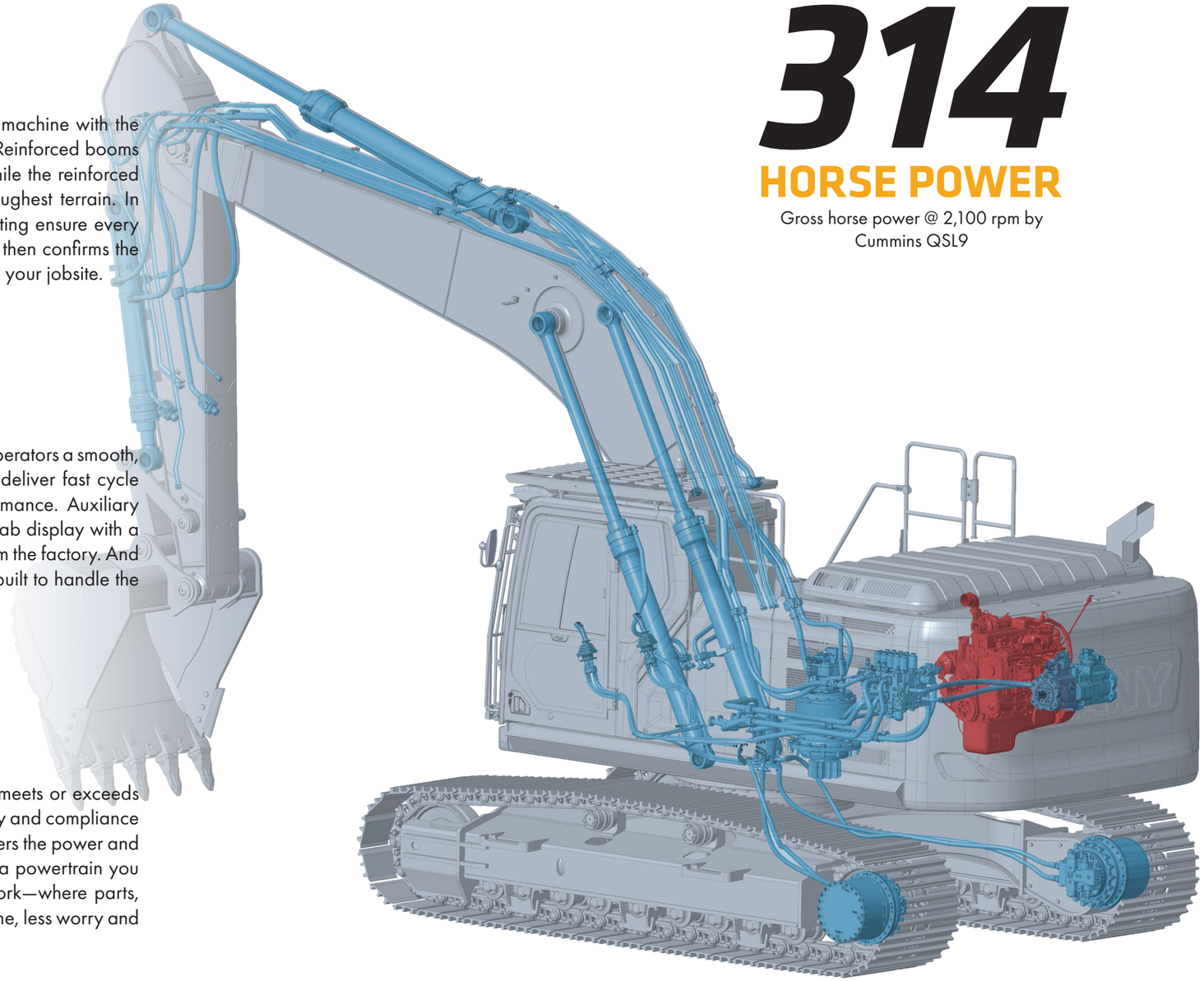



18+ FEATURES

specifically designed for operator and jobsite safety.

SAFETY PRIORITIZED

We design for safety first. Operators get secure handrails, steps, and antislip on top, OEM FOPS cab guarding, and a ROPS-verified cab with multiple exit points. A three-inch seatbelt, emergency shut-off and fire extinguisher add protection inside, while cameras, alarms, and 360° lighting enhance awareness for a safer jobsite.

SY385C

SANY

MEDIUM HYDRAULIC **EXCAVATOR**

85,318 LBS OPERATING WEIGHT
314 HP GROSS HORSEPOWER
26' 4" MAX DIGGING DEPTH

TECHNICAL SPECIFICATIONS

MACHINE DATA	STANDARD STICK	LONG STICK
Operating Weight*	85,318 lbs	90,389 lbs
Bolt-on Counterweight	14,991 lbs	17,196 lbs
Ground Pressure	9.9 psi	10.5psi
Engine Model	Cummins QSL9	
Displacement	542.0 in³	
Net Power	-	
Gross Power	314 HP	
Hydraulics	Positive Flow w/Pilot Control	
Main Hydraulic Pump	Axial Piston – Variable Displacement	
Operating Flow (Max)	190 gpm	
Operating Pressure (Max)	4,975 psi	
Auxiliary Flow	132 gpm	
Auxiliary Pressure	4,975 psi	
Travel Motor	Axial Piston with Park Brake	
Travel Pressure (Max)	4,975 psi	
Travel Speeds (Max)	1.9 / 3.1 mph	
Travel Effort (Max)	71,938 lbf	
Gradability	35°	
Swing Motor	Planetary Drive w/Axial Piston Motors	
Swing Pressure (Max)	4,134 psi	
Swing Speed (Max)	8.8 RPM	
Undercarriage	Steel Track	
Track Shoe Width	31"	
Track Rollers	2	
Carrier Rollers	9	

WORKING SPECIFICATIONS

WORKING RANGE	STANDARD STICK	LONG STICK
Boom Length	21' 4"	21' 4''
Stick (Arm) Length	10' 6"	12' 10''
A Maximum Digging Height	35' 2"	36' 1"
B Maximum Dumping Height	24' 3"	25' 3"
C Maximum Digging Depth	24'	26' 4"
D Maximum Vertical Wall Digging Depth	24'	26' 3"
E Maximum Reach at Ground Level	35' 6"	36' 9"
F Minimum Swing Radius	13' 8"	13' 8"
DIGGING PERFORMANCE	**STANDARD STICK**	**LONG STICK**
Boom Length	21' 4"	21' 4''
Stick (Arm) Length	10' 6"	12' 10''
Bucket Breakout Force (ISO)	52,875 lbf	52,875 lbf
Stick (Arm) Digging Force (ISO)	38,250 lbf	38,250 lbf

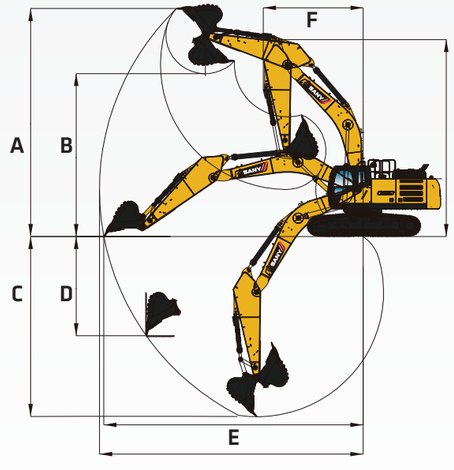

*Operating weight is for the SY385C with no attachments, and standard stick.

SANY America Inc. reserves the right to change these specifications at any time without prior notification. ©2026 SANY America Inc. HEXPS26SY385C001

MEDIUM HYDRAULIC EXCAVATOR SY385C

STANDARD FEATURES

ENGINE
- 8.9l Cummins QSL9
- Auto-idle
- Dual-element dry air filter
- Batteries 24V (2 – 12V)
- Coolant Expansion tank
- Electronic engine control
- Enclosed fan guard
- Engine coolant to –37 deg. C (–34 deg. F)
- Fuel filter with water separator
- Full-flow oil filter
- Turbocharger with charge air cooler
- High flow electric clutch actuated fan
- 500-hour engine-oil-change interval
- 70% (35 deg.) off-level capability
- Engine air precleaner
- Severe-duty fuel filter

HYDRAULIC SYSTEM
- Spring-applied, hydraulically released automatic swing brake
- Auxiliary hydraulic-flow adjustments through monitor
- Control pattern change valve
- Auxiliary hydraulics with 1 and 2-way combination piping for high flow
- Auxiliary hydraulics with 2- way rotation piping and controls
- Auxiliary pilot and electric controls
- Quick coupler plumbing and control

UNDERCARRIAGE
- Planetary drive with axial piston motors
- Propel motor shields
- Spring-applied, hydraulically released automatic propel brake
- Track guides, front idler and 2 additional per side
- 2-speed travel selection
- Upper carrier rollers (2)
- Sealed and lubricated track chain
- Triple semi-grouser shoes, 800 mm (32")
- Undercarriage frame opening guard

BOOM & STICK
- Boom 6.5 m (21' 3")
- Stick, 3.2 m (10' 5")
- Stick, 3.9 m (13' 1")

UPPERSTRUCTURE
- Right-hand, left-hand
- Counterweight mirrors
- Vandal lock with ignition key: Cab door /Service door/ Toolbox/Cab Filter
- Debris screen in side panel
- Remote-mounted engine oil and fuel filters
- Heavy duty triangle channel frame guard

ATTACHMENTS
- Convenient grease points
- Centralized lubrication system

ATTACHMENTS CONTINUED
- Dirt seals on all bucket pins
- Oil-impregnated bushings
- Reinforced resin thrust plates
- Quick coupler
- Buckets: Heavy duty / Heavy-duty high capacity / Side cutter and teeth

OPERATOR'S STATION
- Adjustable independent-control positions (levers-to-seat, seat-to-pedals)
- AM/FM radio with USB charging and Bluetooth® connectivity
- Auto climate control/air conditioner/heater/pressurizer
- Built-in Operator's Manual storage compartment and manual
- 12V and 24V outlets 60 watt 5 amp
- Deluxe heated air suspension cloth seat with adjustable armrests
- Heavy duty rubber floor mat
- Front windshield wiper with intermittent speeds
- Touchscreen Monitor 10.4". Displays Fuel, DEF, Engine temp, Oil temp.
- Horn, electric
- Hour meter, electric. In touch screen.
- Hydraulic shutoff lever, all controls
- Interior light
- Digital Power mode selection: 3 power modes- Low, Standard, and High
- Digital tool selection: Bucket, Shear, Hammer, etc.
- Multifunction color LCD monitor with: Diagnostic capability / Multiple-language / Maintenance tracking / Clock
- System monitoring with alarm features: Auto-idle indicator, engine air cleaner restriction indicator light, engine check, engine coolant temperature indicator light with audible alarm, engine oil pressure indicator light with audible alarm, low-alternator-charge indicator light, low-fuel indicator light, low DEF indication with audible alarm, fault code alert indicator, fuel-rate display, wiper-mode indicator, work-lights-on indicator, and work-mode indicator
- Motion alarm with cancel switch (conforms to SAE J994)
- Auxiliary hydraulic control switches in right console lever
- Seat belt, retractable
- Transparent overhead hatch
- Heated or cooled food/beverage storage
- Air-suspension heated seat
- Hydraulic oil filter restriction indicator light
- Protection screens for cab front, rear, and side

ELECTRICAL
- 60-amp alternator
- Ground level electrical disconnect (lockout tag out)
- Blade-type multi-fused circuits
- Positive-terminal battery covers
- Rearview camera
- Blindside Camera

LIGHTS
- Work lights: High power LED - 2 mounted on boom, 2 mounted on top of Cab, 1 mounted under step on right side of machine

In the interest of continual equipment development, SANY America Inc. reserves the right to change these specifications at any time without prior notification.
©2026 SANY America Inc. HEXPS26SY385C001

LIFTING PERFORMANCE

Standard 21' 4" Boom
Standard 10' 6" Stick
Standard 31" Track Shoes
No Bucket

Ratings are based on ISO 10567:2007. Lift capacity does not exceed 75% of tipping load with the machine on firm, level ground or 87% of hydraulic lifting capacity.

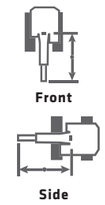

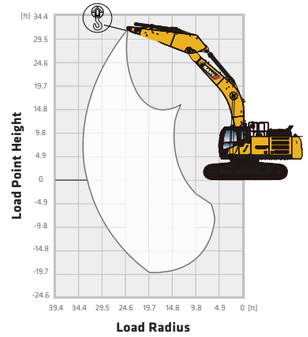

10' 6" Stick

B (HEIGHT)	10 FT		15 FT		20 FT		25 FT		30 FT	
LOAD POINT HEIGHT										
25 ft							*16,413 lbs	*16,413 lbs	*16,552 lbs	*16,552 lbs
20 ft					*17,279 lbs	*17,279 lbs	*16,918 lbs	*16,918 lbs	*17,026 lbs	16,142 lbs
15 ft			*24,855 lbs	*24,855 lbs	*20,532 lbs	*20,532 lbs	*18,488 lbs	*18,488 lbs	*17,544 lbs	14,513 lbs
10 ft			*32,750 lbs	*32,750 lbs	*24,313 lbs	*24,313 lbs	*20,461 lbs	18,484 lbs	*18,111 lbs	13,675 lbs
5 ft			*37,950 lbs	34,987 lbs	*27,460 lbs	23,922 lbs	*22,251 lbs	17,906 lbs	*18,733 lbs	13,413 lbs
0 ft			*39,461 lbs	34,266 lbs	*29,198 lbs	23,283 lbs	*23,371 lbs	17,498 lbs	*19,421 lbs	13,693 lbs
-5 ft	*35,232 lbs	*35,232 lbs	*38,649 lbs	34,183 lbs	*29,361 lbs	23,047 lbs	*23,462 lbs	17,331 lbs	*20,172 lbs	14,652 lbs
-10 ft	*48,843 lbs	*48,843 lbs	*36,039 lbs	34,498 lbs	*27,862 lbs	23,166 lbs	*21,982 lbs	17,463 lbs	*20,973 lbs	16,735 lbs
-15 ft	*41,434 lbs	*41,434 lbs	*31,114 lbs	*31,114 lbs	*23,925 lbs	23,166 lbs			*21,718 lbs	21,446 lbs

12' 10" Stick

B (HEIGHT)	10 FT		15 FT		20 FT		25 FT		30 FT	
LOAD POINT HEIGHT										
25 ft							*14,993 lbs	12,339 lbs		
20 ft							*15,926 lbs	12,323 lbs	16,210 lbs	8,666 lbs
15 ft					*19,245 lbs	17,040 lbs	*17,727 lbs	11,775 lbs	16,570 lbs	8,503 lbs
10 ft			*30,250 lbs	25,260 lbs	*23,325 lbs	16,177 lbs	*19,930 lbs	11,314 lbs	16,300 lbs	8,260 lbs
5 ft			*36,612 lbs	23,708 lbs	*26,835 lbs	15,372 lbs	21,492 lbs	10,860 lbs	16,016 lbs	8,005 lbs
0 ft			*39,515 lbs	22,866 lbs	*29,150 lbs	14,797 lbs	21,080 lbs	10,498 lbs	15,782 lbs	7,795 lbs
-5 ft	*33,865 lbs	*33,865 lbs	*39,725 lbs	22,545 lbs	29,890 lbs	14,484 lbs	20,829 lbs	10,280 lbs	15,668 lbs	7,678 lbs
-10 ft	*49,370 lbs	*49,370 lbs	*37,919 lbs	22,555 lbs	*29,085 lbs	14,411 lbs	*20,770 lbs	10,227 lbs		
-15 ft	*46,533 lbs	*46,533 lbs	*33,955 lbs	22,840 lbs	*26,260 lbs	14,575 lbs			16,212 lbs	8,181 lbs

In the interest of continual equipment development, SANY America Inc. reserves the right to change these specifications at any time without prior notification.
©2026 SANY America Inc. HEXPS26SY385C001

sanyamerica.com ||| SY385C

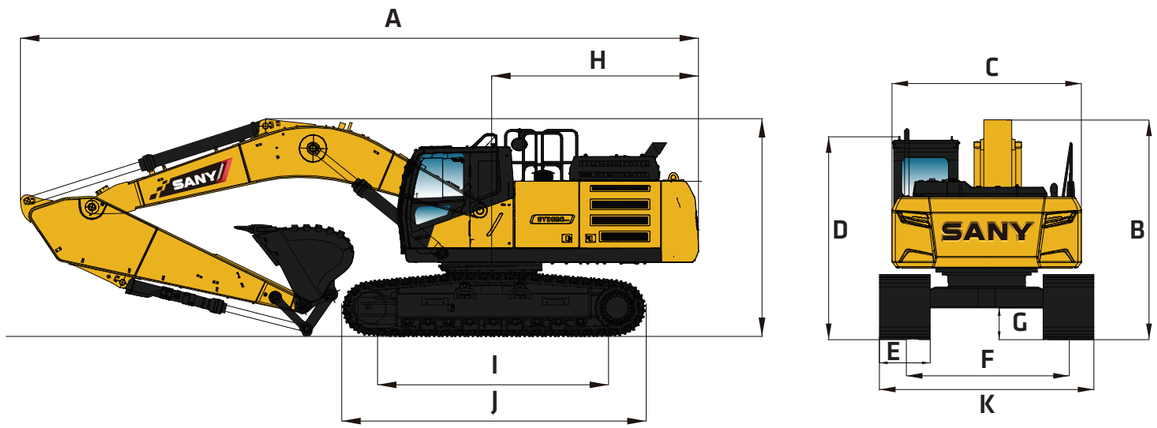

DIMENSIONS		STANDARD STICK	LONG STICK
	Boom Length	21’ 4”	21’ 4”
	Stick (Arm) Length	10’ 6”	12’ 10”
A	Transport Length	36’ 6”	36’ 6”
B	Transport Height	11’ 5”	12’
C	Upper Structure Width	9’ 9”	
D	Cab Height	11’ 0”	
E	Track Width	31” (800 mm)	
F	Track Gauge	7’ 10”	
G	Ground Clearance	1’ 9”	
H	Tail Swing Radius	11’ 4”	
I	Track Length on Ground	13’ 7”	
J	Track Length	16’ 7”	
K	Transport Width	9’ 9”	

SERVICE REFILL CAPACITIES	
Fuel Tank Capacity	160 gal
DEF Tank Capacity	22.7 gal
Hydraulic Tank Capacity	117.3 gal
Engine Oil Capacity	9.3 gal
Cooling System Capacity	3 gal

In the interest of continual equipment development, SANY America Inc. reserves the right to change these specifications at any time without prior notification.
©2026 SANY America Inc. HEXPS26SY385C001

INDUSTRY’S STRONGEST STANDARD WARRANTY | 5-YEAR* 5,000 HOURS

*Warranty applies to 2026 Excavator and Wheel Loader models

SANY America Inc. 318 SANY Way
Peachtree City, Georgia 30269
470.552.SANY sanyamerica.com

CONNECTED, **INFORMED**, IN CONTROL
TECHNOLOGY

CONNECTED EVI TELEMATICS

EVI is SANY’s proprietary telematics platform and is available through your local dealer on excavators. This dashboard lets you track and geofence the machine, view reports on consumption and run time, monitor error codes and manage your SANY fleet—all with more features continually being launched to keep you connected and in control.

GRADE CONTROL COMPATIBLE

The SY385C works with most major 3D indicate grade control systems, giving operators better accuracy and faster results. This compatibility helps reduce rework, improve efficiency and keep production moving—so your machine delivers more value on every job.

INFORMATION AT YOUR FINGERTIPS

The 10-inch touchscreen display is the operator’s hub, showing key machine metrics like fuel and DEF levels, engine and hydraulic temperatures, service codes and more. It also displays multiple camera views, allows quick adjustment of HVAC, and radio while also supporting Bluetooth hands-free calling, operator presets, and attachment configuration—all in one easy-to-use central command center.



16 POINTS

of seat adjustablity plus heated and cooled functions.

DESIGNED FOR **COMFORT** ALL SHIFT LONG

This spacious cab is built for comfort and intuitiveness with safety and ergonomics at the core. The seat offers 16 adjustment points to achieve the ideal position plus heated and cooled functions for all-day comfort. SANY's E-panel places common functions within easy reach and the touchscreen display serves as the control hub. Upgraded HVAC keeps the cab comfortable in any weather, while Bluetooth connectivity and improved noise isolation allow clear hands-free calls. Large glass panels maximize visibility of the work area, helping operators stay confident and productive throughout the shift.

BUILT **AROUND THE** OPERATOR



CUSTOM OPERATOR ERGONOMICS

The 16-way adjustable air-ride seat gives operators complete control over their seating position—height, distance, and angle—so they can align perfectly with the joysticks and foot pedals. This precise adjustability supports better control and a more comfortable working posture all day long.

OPTIMAL JOBSITE AWARENESS

Large glass panels, sliding side windows, and integrated backup and blind-side cameras give operators a clear view of their surroundings. With added surround-view mirrors, they can confidently and safely control the machine on the jobsite.

INTENTIONALY **ENGINEERED** FOR SERVICE

UPTIME IS OUR PRIORITY

With fast diagnostics, streamlined repairs and software tools for remote support it's easy to keep your SANY excavator running strong. Our local dealer network, stretching across North America, provides quick response and maximizes your productivity.

DEDICATED TO SUPPORT

We're expanding our U.S. footprint with local engineering, quality assurance and service teams—backed by a multi-year investment in support, training, and parts.

EASE OF ACCESS

Its spacious compartments offer ample room for tools, filters, and components, ensuring efficient inspections and replacements that minimize downtime on the job site.

FAST DAILY PRE-CHECKS

Machines are designed so operators can safely and easily inspect critical systems—mostly from the ground—for quick visual and manual checks.

PARTS ON THE SHELF READY TO SHIP

We continually expand parts inventory across our major North American distribution centers and improve forecasting to keep high-demand components in stock. This longterm strategy ensures critical parts are ready to ship when they're needed most.





#1 *FASTEST* GROWING

support network in North America.



15% MORE

engine compartment space than previous generation machines.

WE'VE GOT YOUR BACK

At SANY, we see every customer as a relationship whose success is directly tied to ours. We focus on keeping you productive, because when your machines are running, your business is winning. Our warranty support, faster claim approvals are built to protect your operations not just your equipment. Your feedback fuels continuous improvement—real updates to software, hydraulics, and performance through close collaboration with key suppliers. With expanding U.S. support, trained technicians, ongoing investments, and stronger parts availability, we stay by your side so your business can keep moving forward.



CUSTOMERS FIRST ALWAYS

At SANY America, everything begins with you. We design machines that make your work safer, more efficient, and more profitable—and we stand behind them with U.S.-based support you can count on. From ergonomic cabs and superior visibility to quick daily checks and dependable uptime, every feature is engineered around real operator needs and real jobsite demands. Your feedback directly drives our product improvements, accelerating software updates, hydraulic refinements, and long-term durability enhancements. With expanding American facilities, local engineering and service teams, certified technicians, and three parts distribution centers nationwide, we operate as your committed business partner—focused on your success today and every day ahead.

INDUSTRY'S **STRONGEST** STANDARD WARRANTY

SANY America delivers the most comprehensive standard warranty in the industry—protecting your investment from day one.

- **5 years / 5,000 hours of full machine coverage included with every excavator**
- **Lower total operating risk and fewer unexpected costs over machine life**
- **Confidence in long-term durability backed by factory engineering and testing**
- **Stronger coverage than leading OEM competitors – standard, not add-on**

Choosing SANY means choosing equipment built to work—and a partner committed to standing behind your success.

FINANCING THAT WORKS AS HARD AS YOU DO

Smart financing that makes owning SANY equipment faster, easier, and affordable.

- **Quick approvals – many customers approved in under 5 minutes**
- **Simple mobile app for secure document signing and easy payment management**
- **Flexible terms and competitive promotions, including 0% for 60 months**
- **Faster approvals for repeat customers to keep your fleet growing**
- **Top-rated experience with a 4.95 out of 5 Trustpilot score**

Financing with SANY is built to support your business growth every step of the way.

TOTALCOST OF OWNERSHIP

SANY machines are engineered to deliver a stronger return on investment by lowering the true cost of ownership over the life of your equipment.

- **Fuel-efficient performance reduces operating costs every hour the machine runs**
- **Extended service intervals minimize downtime and maintenance expense**
- **Parts cost management keeps replacement and wear items affordable**
- **High resale value helps protect your investment over time**
- **More standard features from the factory reduce the need for costly add-ons**

Every detail is designed to help you earn more, spend less, and get maximum value from every machine you own.



*Warranty applies to 2026 Excavator and Wheel Loader models.

SANY America Inc.
318 SANY Way
Peachtree City | GA 30269
T | 470-552-SANY

BRHEX26SY385C001

sanyamerica.com

In the interest of continual equipment development, SANY America Inc. reserves the right to change these specifications at any time without prior notification.

© 2026 SANY America Inc.